Fiberglass Conductor Supports

ALUMA-FORM®

F1CS - HV - AXX - J HP-2

Fiberglass Single Phase Conductor Support mount

HV = 2” Rod
MV = 1-1/2” Rod

A = 15° Angle
V = Ridge Pin

XX = distance from the pole

Pole Gain Type
“J” = Jump Proof
“B” = Back to Back
“R” = Ridge Pin

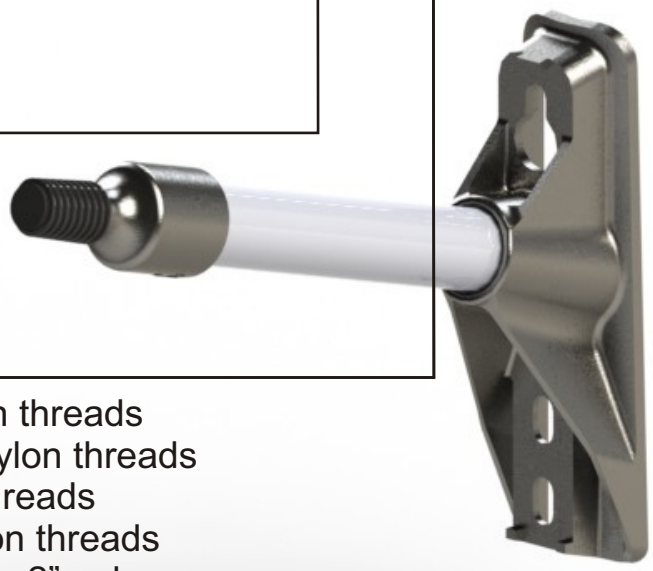

End Fitting Type
“HP-1” = Horizontal Pin w/ 1” nylon threads
“HP-2” = Horizontal Pin w/ 1-38” nylon threads
“VP-1” = Vertical Pin w/ 1” nylon threads
“VP-2” = Vertical Pin w/ 1-3/8” nylon threads
“PI” = Horizontal Post Insulator - 2” only
“PIH” = Horizontal Post Insulator w/ Hook - 2” only
“SP-X” = Post Insulator w/ 3/4” Stud (”X” = bolt length) - 2” only